M12 male 90° A-cod. / MSUD valve plug BI-11mm

PUR 3x0.75 bk UL/CSA+drag ch. 0.6m

MSUD
Form BI (11 mm) – M12, male 90°
24 V AC ±20% / DC ±25%
LED and suppression
Further cable lengths on request.
Plastic housings with good resistance against chemicals and oils.
The resistance to aggressive media should be individually tested for your application. Further details on request.

Link til produkt

Illustrasjon

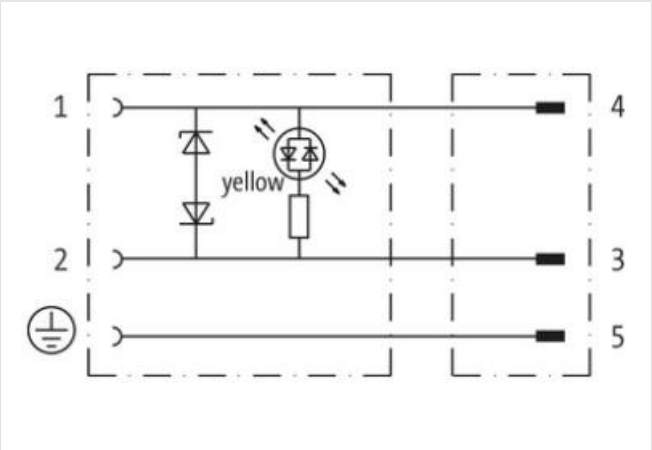

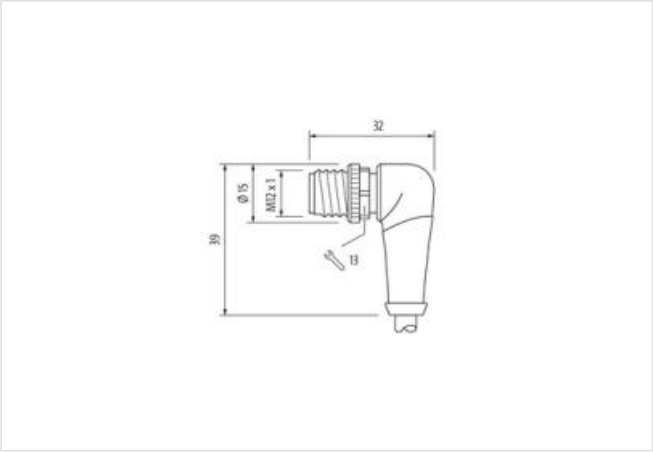

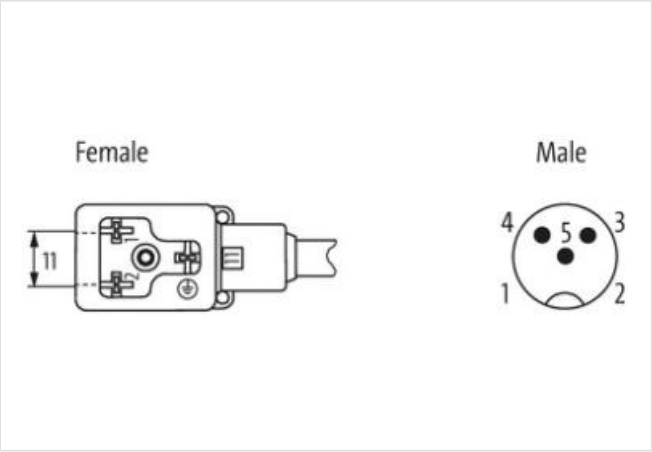

Opplysningene i dette databladet er utarbeidet med størst mulig omhu.
All informasjon gis uten ansvar for eventuelle feil og mangler. 24.04.2024

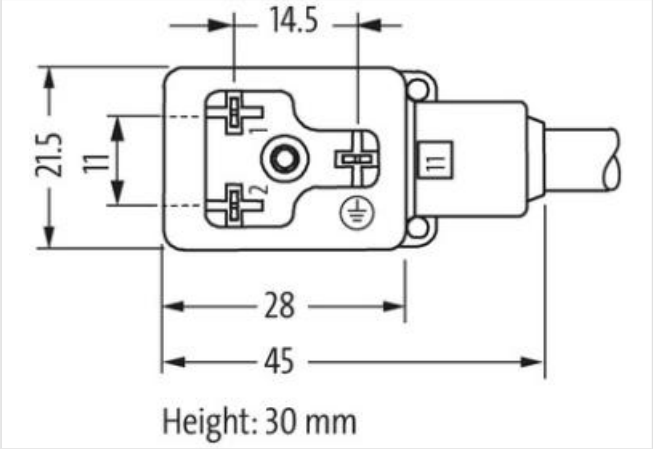

Produktet kan avvike fra bildet

Cable length	0,6 m
Side 1	
Tightening torque	0,4 Nm
Thread	M3
Degree of protection (EN IEC 60529)	IP66K, IP67
Side 2	
Tightening torque	0,6 Nm
Thread	M12 x 1
Degree of protection (EN IEC 60529)	IP66K, IP67
Handelsinformasjon	
ECLASS-6.0	27279218
ECLASS-6.1	27279218
ECLASS-7.0	27279218
ECLASS-8.0	27279218
ECLASS-9.0	27060312
ECLASS-10.1	27060312
ECLASS-11.1	27060312
ECLASS-12.0	27060312
ETIM-5.0	EC001855
GTIN	4048879148177
Pakkestørrelse	1
Tolltariffnummer	85444290
Electrical data	
Capacity CX	20 ms
Electrical data | Supply	
Operating voltage AC	24 V
Operating voltage AC min.	19,2 V
Operating voltage AC max.	28,8 V
Operating voltage DC	24 V
Operating voltage DC min.	18 V
Operating voltage DC max.	30 V
Cut-off peak voltage max.	55 V

Opplysningene i dette databladet er utarbeidet med størst mulig omhu.
All informasjon gis uten ansvar for eventuelle feil og mangler. 24.04.2024

Current operating per contact max.	4 A
Current consumption max.	12 mA
Diagnostics	
Status indication LED	yellow
Device protection | Electrical	
Additional condition protection degree	inserted, screwed
Rated surge voltage	0,8 kV
Mechanical data | Material data	
Color housing	black
Material housing	Plastic
Mechanical data | Mounting data	
Mounting method	inserted, screwed
Environmental characteristics | Climatic	
Operating temperature min.	-25 °C
Operating temperature max.	85 °C
Additional condition temperature range	depending on cable quality
Installation | Cable	
Cable identification	636
Cable Type	3
Printing color of wire insulation	white (isolation black)
Jacket Color	black
Type of Certificate	cURus
Amount stranding	1
Stranding	3 wires twisted
wire arrangement	black 1, black 2, green-yellow
No. of bending cycles (C-track)	10 Mio. @ 25 °C
Cable weigth	56,1 g/m
Material jacket	PUR
Shore hardness jacket	90 ± 5 Shore A
Freedom from ingredients (jacket)	lead-free, cadmium-free, CFC-free, halogen-free, silicone-free
Outer-diameter (jacket)	5,9 mm
Tolerance outer diameter (sheath)	± 5 %
Material wire insulation	PP
Amount wires	3
Outer diameter insulation	1,85 mm
Outer diameter tolerance core insulation	± 5 %
Shore hardness wire insulation	70 ± 5 Shore D
Ingredient freeness wire insulation	lead-free, cadmium-free, CFC-free, halogen-free, silicone-free
Printing color of wire insulation	white (isolation black)
Amount strands (wire)	42
Diameter of single wires	0,15 mm
Conductor crosssection (wire)	0,75 mm²
Material conductor wire	Stranded copper wire, bare
Conductor type (wire)	strand class 6
Traversing distance (C-track)	10 m @ 25 °C | horizontal
Current load capacity (standard)	to DIN VDE 0298-4
Current load capacity min. wire	12 A
Electrical resistance line constant wire	26 Ω/km @ 20 °C
Nominal voltage power AC max.	300 V
Power frequency withstand voltage power (wire - jacket)	2,5 kV @ 60 s
AC withstand voltage power (wire - wire)	2,5 kV @ 60 s

Opplysningene i dette databladet er utarbeidet med størst mulig omhu.
All informasjon gis uten ansvar for eventuelle feil og mangler. 24.04.2024

Min. operating temperature (static)	-40 °C
Max. operating temperature (fixed)	80 °C / 90 °C @ 10000 h Operation
Operating temperature min. (dynamic)	-25 °C
Operating temperature max. (dynamic)	80 °C / 90 °C @ 10000 h Operation
UV resistance	DIN EN ISO 4892-2 A
Flame resistance	IEC 60332-2-2 | UL 1581 § 1100 FT2 | UL 1581 § 1090
chemical resistance	Good, application-related testing
Gasoline resistance	Good, application-related testing
Oil resistance	Good, application-related testing | DIN EN 60811-404
Bending radius (fixed)	5 x Outer diameter
Bending radius (dynamic)	10 x Outer diameter
No. of torsion cycles	2 Mio.
Torsion speed	35 cycles/min
Torsion stress	± 180 °/m

Opplysningene i dette databladet er utarbeidet med størst mulig omhu.
All informasjon gis uten ansvar for eventuelle feil og mangler. 24.04.2024