MURR ELEKTRONIK
stay connected

M12 male 0° B-cod. with cable

PUR 5x0.34 bk UL/CSA 2.5m

⚠ NOTICE ⚠
PRODUCT IS DISCONTINUED. PLEASE HAVE A LOOK AT THE ALTERNATIVE PRODUCTS.

Male straight
M12, 5-pole
B-coded
Art-No. 7005 - M12 Lite - (plastic hexagonal screw) on request
Plastic housings with good resistance against chemicals and oils.
The resistance to aggressive media should be individually tested for your application. Further details on request.
Further cable lengths on request.

Link til produkt

Illustrasjon

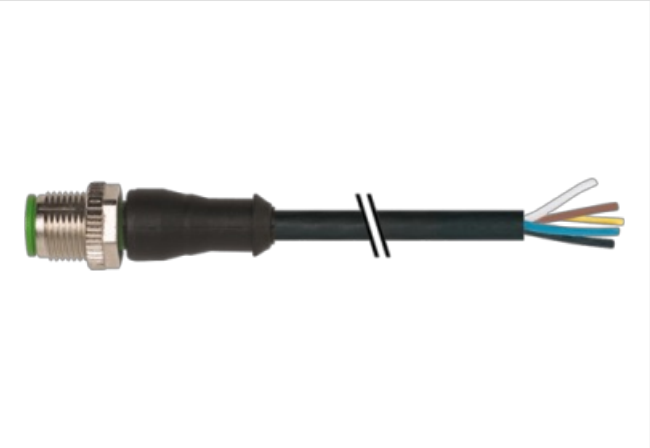

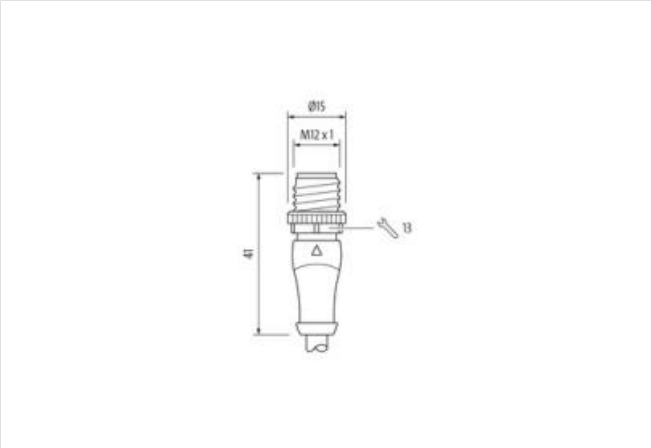

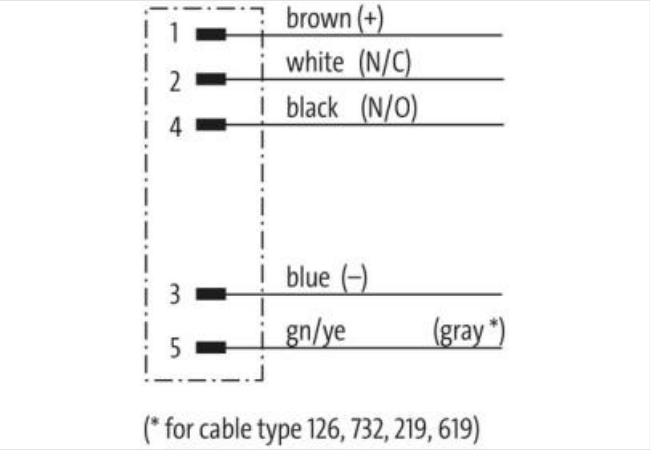

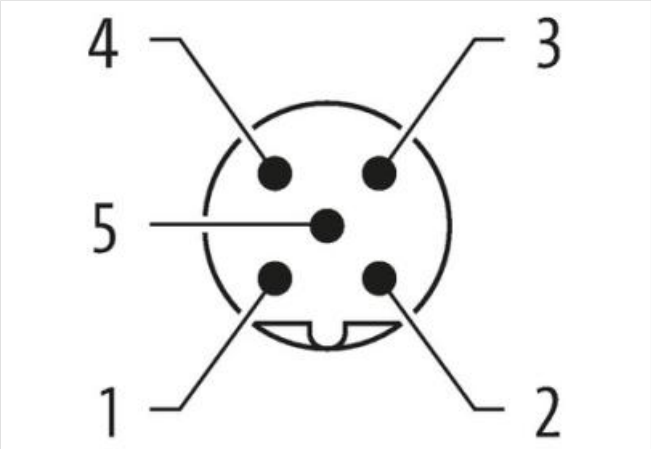

Produktet kan avvike fra bildet

Cable length	2,5 m
Side 1	
Tightening torque	0,6 Nm
Mounting method	inserted, screwed
Family construction form	M12
Thread	M12 x 1
suitable for corrugated tube (internal Ø)	10 mm
Coding	B
Material	PUR
No. of poles	5
Width across flats	SW13
Degree of protection (EN IEC 60529)	IP67
Handelsinformasjon	
ECLASS-6.0	27061801
ECLASS-6.1	27279218
ECLASS-7.0	27279218
ECLASS-8.0	27279218
ECLASS-9.0	27060311
ECLASS-10.1	27060311
ECLASS-11.1	27060311
ECLASS-12.0	27060311
ETIM-5.0	EC001855
GTIN	4048879736183
Pakkestørrelse	1
Tolltariffnummer	85444290
Electrical data | Supply	
Operating voltage AC max.	125 V
Operating voltage DC max.	125 V
Current operating per contact max.	4 A
Installation | Connection	
Mounting set	M12 x 1
Device protection | Electrical	
Pollution Degree	3
Rated surge voltage	1,5 kV
Material group (IEC 60664-1)	I
Mechanical data | Material data	
Coating locking	Nickeled
Coating of fitting	nickel plated
Locking material	Zinc die-casting
Material screw connection	Zinc die-casting
Mechanical data | Mounting data	
Mounting method	inserted, screwed, Shaking protection
Environmental characteristics | Climatic	
Operating temperature min.	-25 °C
Operating temperature max.	85 °C
Additional condition temperature range	depending on cable quality
Cable	
Cable identification	625
Cable Type	2 (PUR/PVC)
Approval (cable)	UL (AWM-Style 20549/1731), CSA; CE conform

Opplysningene i dette databladet er utarbeidet med størst mulig omhu.
All informasjon gis uten ansvar for eventuelle feil og mangler. 20.05.2024

Cable weight [g/m]	54,78 g
Material wire	Cu wire, bare
Resistor (core)	max. 57 Ω/km (20 °C)
Single wire Ø (core)	0.1 mm
Construction (core)	42× 0.1 mm (multi-strand wire class 6)
Diameter (core)	5× 0.34 mm²
AWG	similar to AWG 22
Material wire isolation	PVC
Material property wire insulation	CFC-, cadmium-, silicone- and lead-free
Shore hardness wire isolation	43 ±5 D
Wire-Ø incl. isolation	1.25 mm ±5%
Color/numbering of wires	br, bk, bl, wh, gnye longitudinally striped
Stranding combination	5 wires twisted around central filler
Shield	no
Material jacket	PUR/PVC
Material property (jacket)	CFC-, halogen-, cadmium-, silicone- and lead-free, matt, low-adhesion, machine easy to process, abrasion-resistant, hydrolysis and microbial resistant
Shore hardness jacket	80 ±5 A (PVC-under jacket); 85 ±5 A (PUR-jacket)
Outer-Ø (jacket)	5.0 mm ±5%
Color jacket	black
chemical resistance	good resistance to oil, gasoline and chemicals
Nominal voltage	UL 300 V AC
Test voltage	2000 V AC
Current load capacity	to DIN VDE 0298-4
Temperature range (fixed)	-30...+80 °C
Temperature range (mobile)	-5...+80 °C
Bending radius (fixed)	10× outer Ø
Bending radius (dynamic)	15× outer Ø
No. of bending cycles (C-track)	max. 2 Mio. (25 °C)
Travel speed (C-track)	max. 3.3 m/s
Acceleration (C-track)	max. 5 m/s²

Opplysningene i dette databladet er utarbeidet med størst mulig omhu.
All informasjon gis uten ansvar for eventuelle feil og mangler. 20.05.2024