stay connected

RMME 11/230 AC INPUT RELAY

IN: 230 VAC/DC - OUT: 125 VAC/DC / 1 A

1 relay; 1 NO contact
1 A
230 V AC
Screw terminals

Link to Product

Illustration

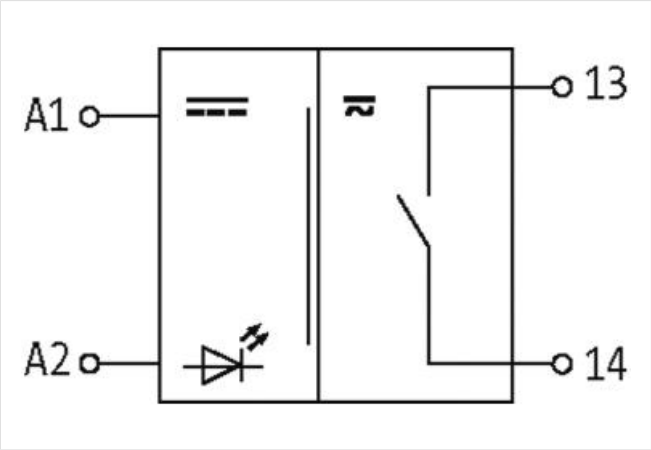

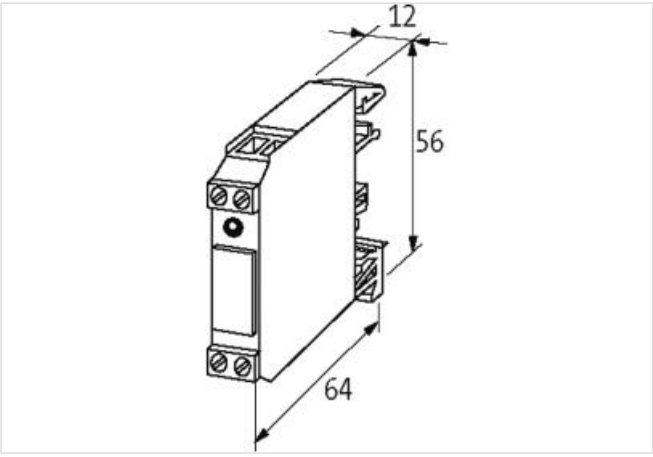

Product may differ from Image

Commercial data

ECLASS-6.0	27371001
ECLASS-6.1	27371601
ECLASS-7.0	27371601
ECLASS-8.0	27371601
ECLASS-9.0	27371601
ECLASS-10.1	27371601

The information in this Product-PDF has been compiled with the utmost care.
Liability for the correctness completeness and topicality of the information is restricted to gross negligence. Version: 2024-04-27

ECLASS-11.1	27371601
ECLASS-12.0	27371601
ETIM-5.0	EC001437
customs tariff number	85364900
GTIN	4048879027540
Packaging unit	1
Electrical data | Input	
Input voltage AC	230 V
Input voltage AC min.	195 V
Input voltage AC max.	253 V
Input voltage DC	230 V
Input voltage DC min.	195 V
Input voltage DC max.	253 V
Input current	6 mA
Electrical data | Output	
Utilization category AC-15 (EN IEC 60947-5-1)	0,25 A @ 50 V
Switching frequency max.	15 Hz
Power rating AC max.	60 VA
Power rating DC max.	30 W
Switching voltage AC max.	125 V
Switching voltage DC max.	125 V
Switching current DC	1 mA
Switching current max.	1 A
Switching capacity AC-12 (EN IEC 60947-5-1)	0.5 A (50 V AC)
Diagnostics	
Status indication LED	yellow
Device protection	
Condition lifetime	load-dependent
Device protection | Electrical	
Rated surge voltage	1,5 kV
Electrical lifetime	100000000 Cycles
Device protection | Mechanical	
Mechanical endurance	100000000 Cycles
Mechanical data	
Drop-out time max.	10 ms
Response time max.	10 ms
Bounce time max.	1 ms
Mechanical data | Material data	
Material contact	Pd Ni-Au Rh
Mechanical data | Mounting data	
Mounting method	geschnappt
Suitable for mounting type	Mounting rail TH35, G32, (EN 60715)
Height	56 mm
Width	12 mm
Depth	64 mm
Environmental characteristics | Climatic	
Operating temperature min.	-20 °C
Operating temperature max.	60 °C
Connection type 2	
Connection type 1	X1

The information in this Product-PDF has been compiled with the utmost care.
Liability for the correctness completeness and topicality of the information is restricted to gross negligence. Version: 2024-04-27

Connection type 2	X2
Connection	Screw terminals SK
Family construction form	terminal
Gender	female
Color contact carrier	green
No. of poles	2
PIN 1	A 1
PIN 2	A 2
Connection	Screw terminals SK
Family construction form	terminal
Gender	female
Color contact carrier	green
No. of poles	2
PIN 1	13
PIN 2	14

The information in this Product-PDF has been compiled with the utmost care.
Liability for the correctness completeness and topicality of the information is restricted to gross negligence. Version: 2024-04-27